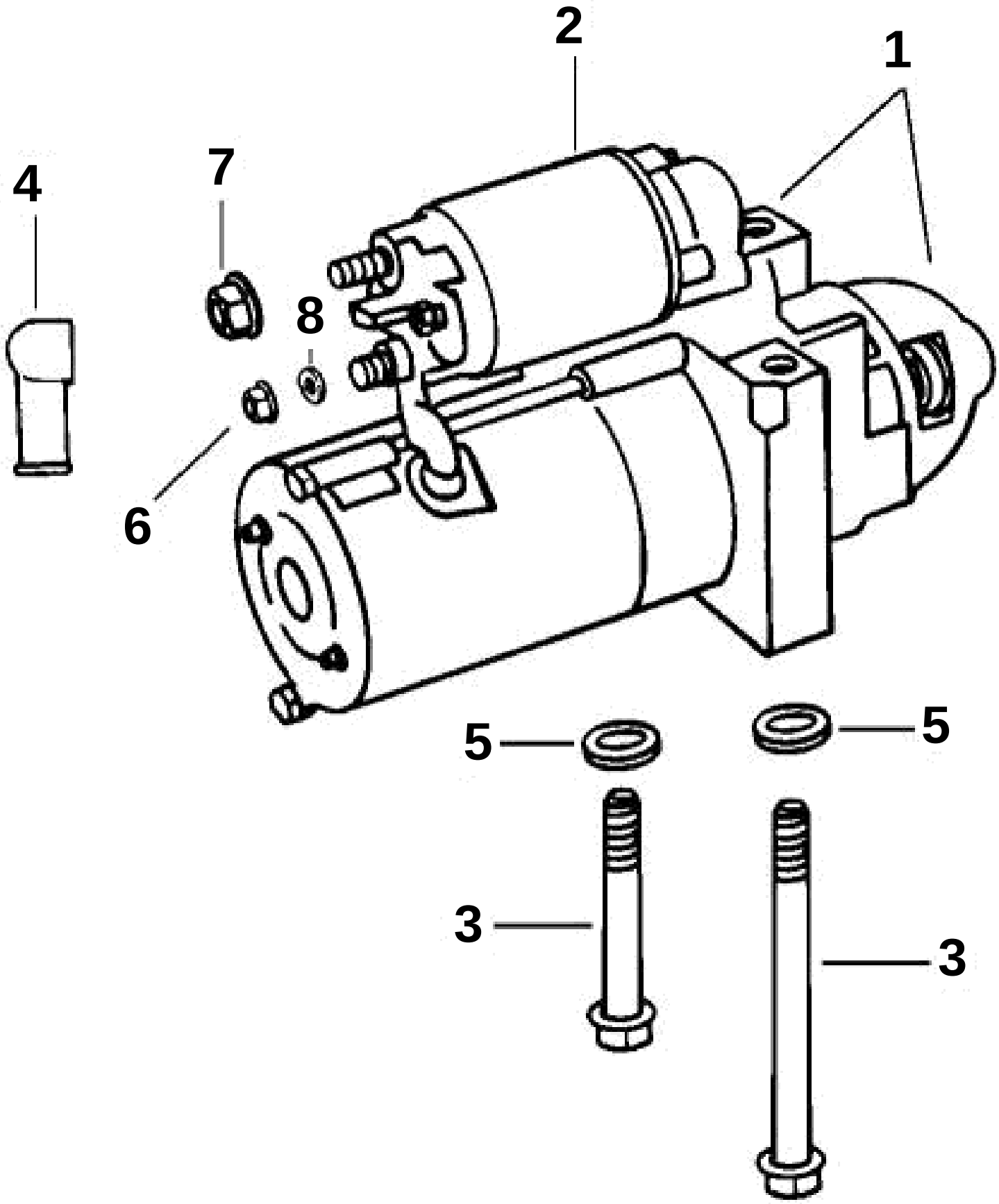
2
1
4
7
8
6
5
5
3
3

STARTER MOTOR

REF	PART NO.	QTY	DESCRIPTION
1	3856004	1	Starter motor, Engine
2	3850216	1	· Solenoid
3	3854752	2	· Screw, Starter motor to engine
4	3852487	1	· Protective cap, Battery cable
5	3854496	2	· Washer, Screw, starter motor to engine block
6	3852518	2	· Nut, Starter solenoid
7	3853714	1	· Nut, Battery cable to starter solenoid
8	3852520	2	· Washer, Stud, starter solenoid